ACCESSORY SERIES

POWER BURNER

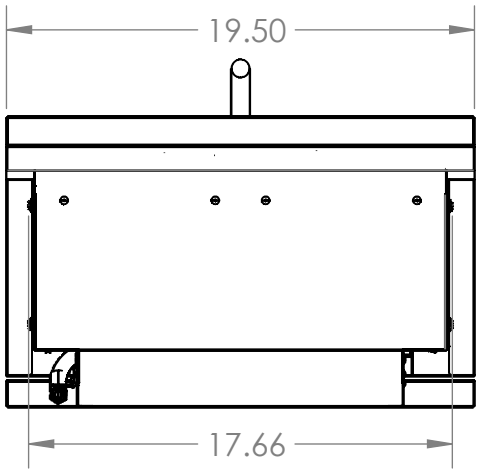

FRONT VIEW

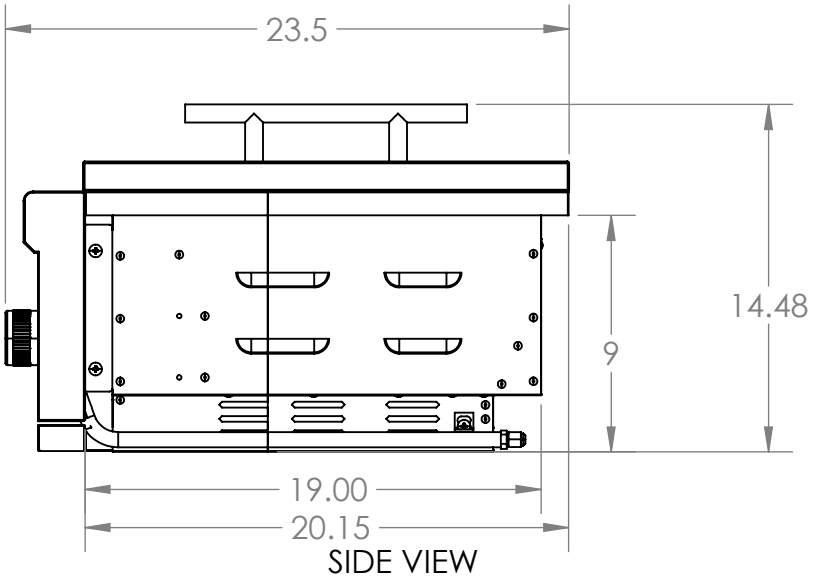

SIDE VIEW

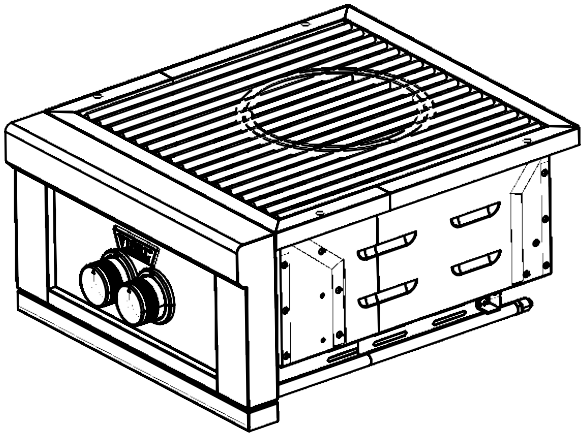

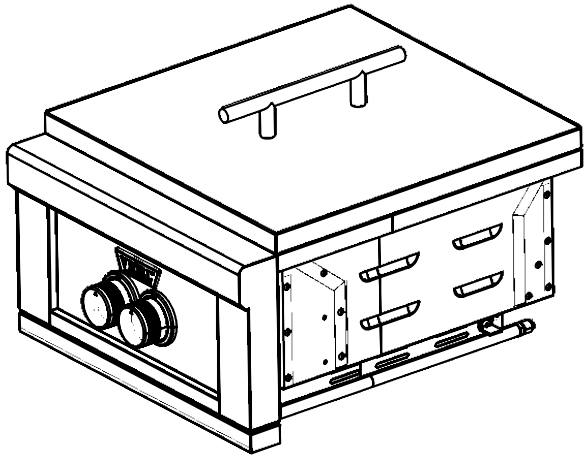

ISOMETRIC VIEW

OVERALL PRODUCT DIMENSIONS				CUTOUT DIMENSIONS FOR ISLAND			
PART NUMBER	HEIGHT	WIDTH	DEPTH	PART NUMBER	HEIGHT	WIDTH	DEPTH
VG-20PB	14.5"	19.5"	22.5"	VG-20PB	9"	18.5"	19.5"

IMPORTANT NOTICE - VIDEL USA

This guide is supplemental and does not replace the Owner's Manual.
Read the manual first to ensure safe installation and operation.

Proprietary & Confidential: The information contained in this drawing is the sole property of ***The Outdoor Plus***. Any reproduction or as a whole without written permission of ***The Outdoor Plus*** is prohibited.

VIDELUSA.COM | SALES@VIDELUSA.COM | Main Phone: (909) 460-5579 | Fax: (909) 460-5530 | 701 S Dupont Ave. Ontario, California 91761, U.S.A